VTK Point Level Switch for Liquids

Characteristics

- **Unaffected by variations in conductivity or dieletric constant.**
- **All 316SS body and wetted parts Halar coating when necessary**
- **IP65 class protection (IEC 60529).**
- **Output.**
  - SPDT Relay (VTK R model)
  - PNP 3 wires (VTK DC model)
- **Available with customized length options to best suit your application.**
- **Available in Threaded, Sanitary and Flanged connections**

Descriptions

Sitron VTK series of vibrating tuning forks are an ideal solution for many point level detection applications because they are un-affected by either the dielectric or the conductivity of the medium.

When the tuning fork is submerged in the medium the frequency at which at which it vibrates changes. This change is detected by the unit's electronics and is converted into a switch output, either relay (SPDT) or PNP/NPN (depending on the model).

Users around the world have come to depend on this technology as one that is easy to apply and very reliable. All models are made in 316 Stainless Steel, can be ordered with a great variety of threaded, flange, or hygienic fittings, are available with Halar or epoxy coatings.

All models (except the mini-versions) have a time delay adjustment of 1, 5, 10 or 20 seconds as well as a Wet/Dry selection for both High and Low level application requirements.

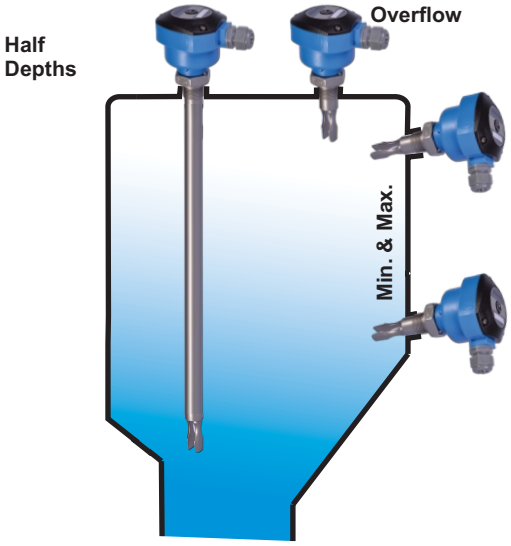

Dimensions (mm)

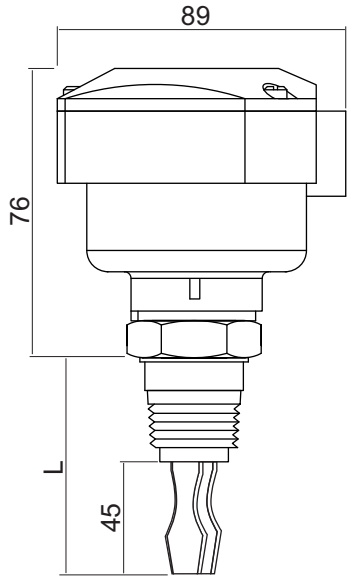

VTK-DC-X-X-X-X-N1

Application: Level Switch for Liquids
Power Supply: 20...60Vcc
Consumption: +/- 3mA
Output: PNP (3 wires), 500mA
Housing: N1 Fiberglass
Switching Point: 13 mm from tip
Time Delay: 1 to 20 seconds.
Medium viscosity: 0.5...5000 cSt
Electrical Connection: 1/2" NPT, M12, (outhers)
Process Connections: BSP, NPT, Sanitary or Flanged
Body Material: 316 SS
Operating Temp.: -14 to 176º F (-10 to 80ºC) / extended neck to 212°F (100°C)
Max Pressure: 50 Bar
Class Protection: IP65

L: Insertion Length

Electrical Connections

Nylon Housing - N1

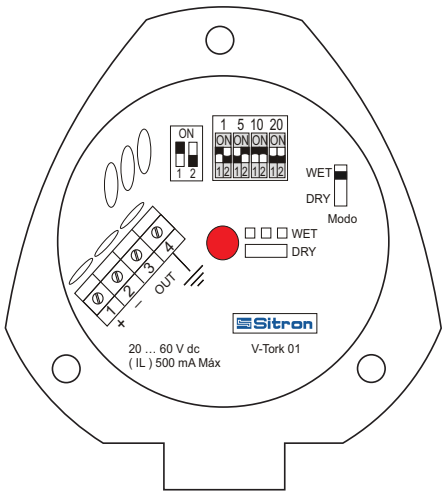

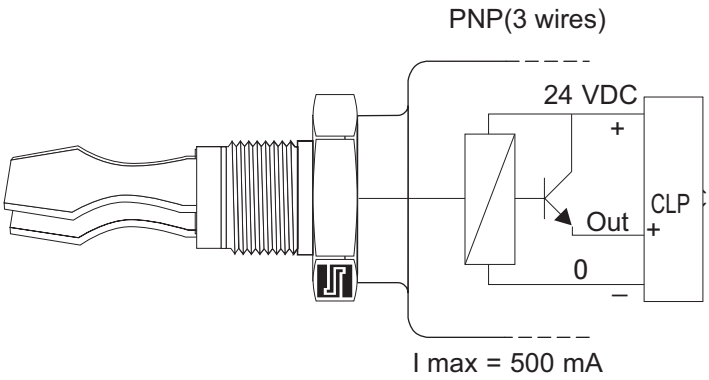

Dimensions (mm)

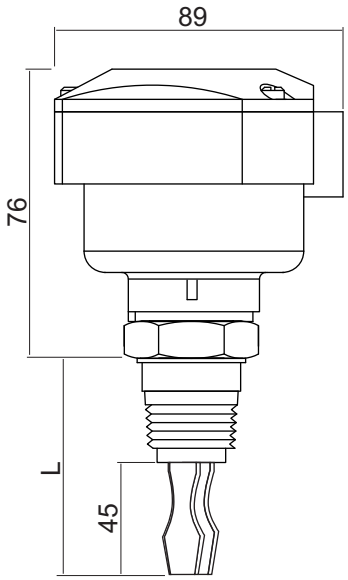

VTK-R-X-X-X-X-N1

Application: Level Switch for Liquids
Power Supply: 18...36Vdc & 85...264Vac (50/60 Hz)
Consumption: DC:<20mA / AC: <35mA
Output: Relay (SPDT), 5A-250Vac
Housing: N1 Fiberglass
Switching Point: 13 mm from tip
Time Delay: 1 to 20 seconds.
Medium viscosity: 0.5...5000 cSt
Electrical Connection: 1/2" NPT, M12, (outhers)
Process Connections: BSP, NPT, Sanitary or Flanged
Body Material: 316 SS
Operating Temp.: -14 to 176º F (-10 to 80ºC) /
extended neck to 212°F (100°C)
Max Pressure: 50 Bar
Class Protection: IP65

L: Insertion Length

Electrical Connections

Nylon Housing - N1

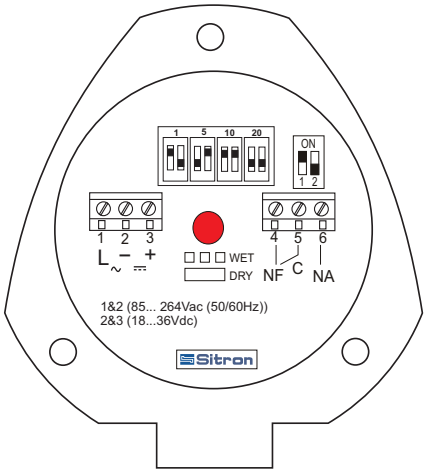

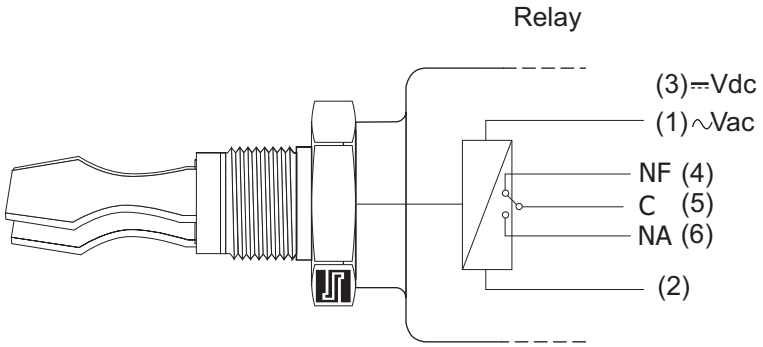

Dimensões (mm)

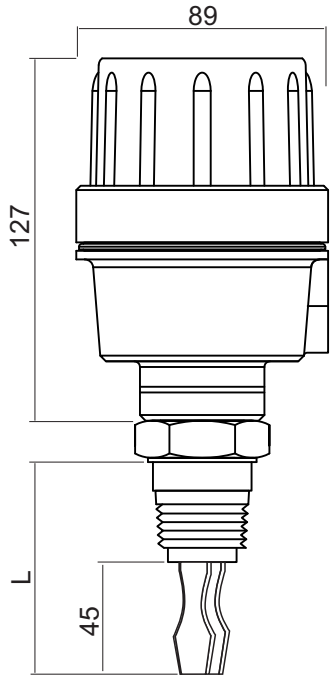

L: Insertion Length

VTK-R-X-X-X-X-G1

Application: Level Switch for Liquids
Power Supply: 18...36Vdc & 85...264Vac (50/60 Hz)
Consumption: DC:+/- 6mA / AC: 10mA
Output: Relay (SPDT), 5A-250Vac
Housing: Aluminum
Switching Point: 13 mm from tip
Time Delay: 1 to 20 seconds.
Medium viscosity: 0.5...5000 cSt
Electrical Connection: 1/2" NPT, M12, (outhers)
Process Connections: BSP, NPT, Sanitary or Flanged
Body Material: 316 SS
Operating Temp.: -14 to 176º F (-10 to 80ºC) / extended neck to 212°F (100°C)
Max Pressure: 50 Bar
Class Protection: IP65

Electrical Connections

Aluminum Housing - G1

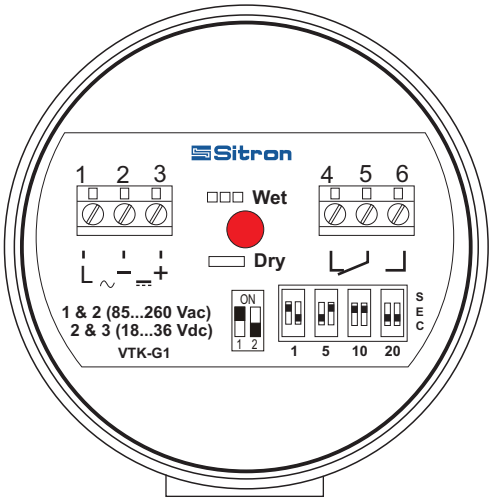

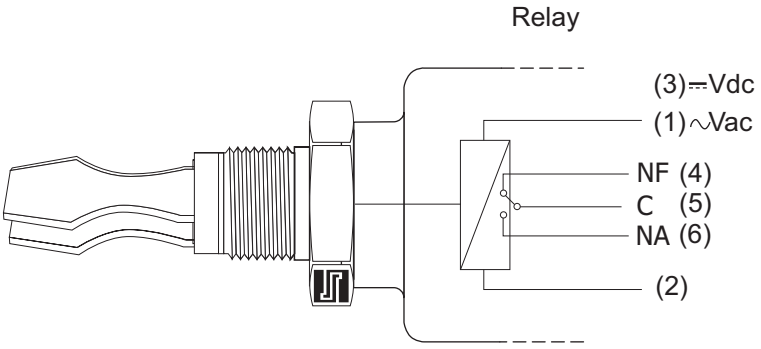

Dimensions (mm)

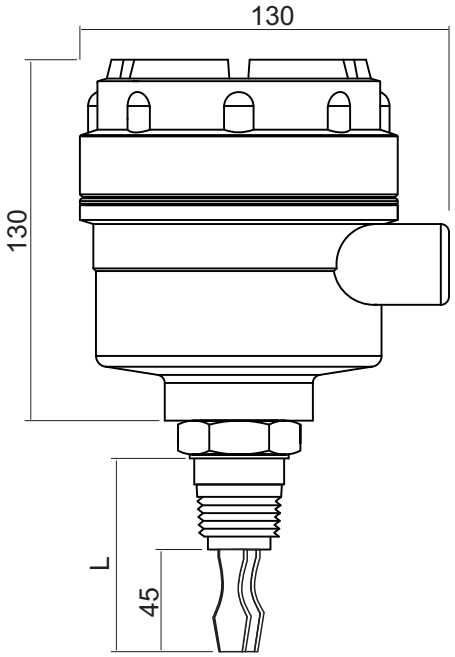

VTK-R-X-X-X-X-G2

Application: Level Switch for Liquids
Power Supply: 18...36Vdc & 85...264Vac (50/60 Hz)
Consumption: DC:<20mA / AC: <35mA
Output: Relay (1 NO + 1 NC), 5A-250Vac
Housing: Aluminum
Switching Point: 13 mm from tip
Time Delay: 1 to 20 seconds.
Medium viscosity: 0.5...5000 cSt
Electrical Connection: 2x 1/2" NPT
Process Connections: BSP, NPT, Sanitary or Flanged
Body Material: 316 SS
Operating Temp.: -14 to 176º F (-10 to 80ºC) / extended neck to 212°F (100°C)
Max Pressure: 50 Bar
Class Protection: IP65

L: Insertion Length

Electrical Connections

Aluminum Housing - G2

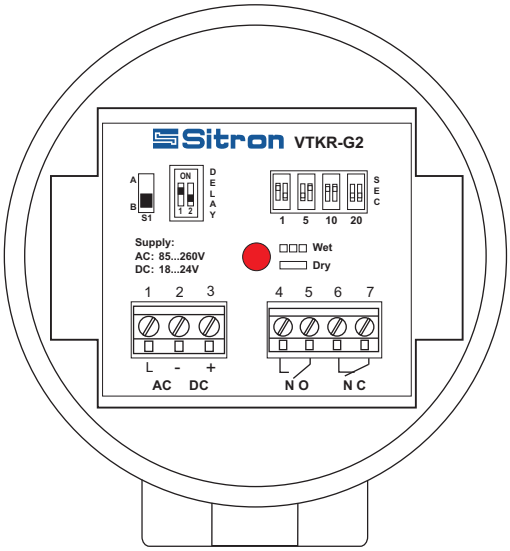

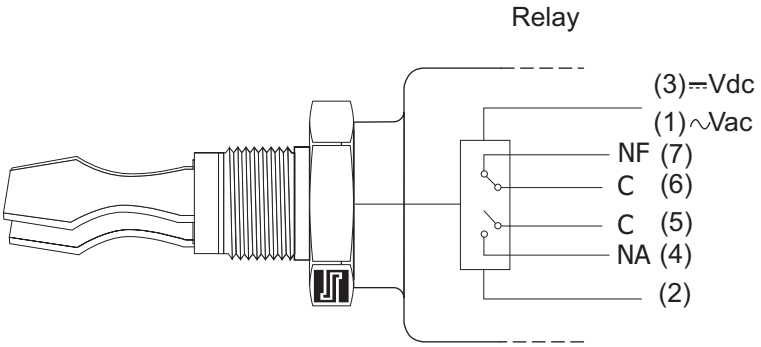

Sitron

Código de Pedido

MODEL

VTK-DC	Enclosure - 20...60Vdc Power Supply - Output PNP (3 Wire)
VTK-R	Enclosure - Universal Power Supply - Output Relay (1SPDT)

SIZE

4	3/4”
5	1”
6	1 1/2”
7	2”
9	3”
Q	4”
X	OTHER

PROCESS CONNECTION TYPE

B	BSP
N	NPT
D	FLANGE ANSI 150# - Carbon Steel Painted
E	FLANGE ANSI 150# - 316 SS
G	FLANGE ANSI 300# - Carbon Steel Painted
H	FLANGE ANSI 300# - 316 SS
K	FLANGE ANSI 150# - 304 SS
L	FLANGE ANSI 300# - 304 SS
T	TRI-CLAMP
X	OTHER - SPECIFY

COATING

S	NONE
H	HALAR® Coated
E	EPOXY Coated
P	Polished
X	OTHER - SPECIFY

INSERTION LENGTH

L80	L=3 1/8” (80mm) - Standard
L64	L=64mm - Standard (Sanitary connection)
L	SPECIFY

HOUSING

SC	No enclosure
N1	Small Nylon
NE	N1 Encapsulated
G1	Small Aluminium
G2	Large Aluminium
GX	Aluminium EX proof (EXd)

ELECTRICAL CONNECTION

1	1/2" BSP
2	PC 1/2" BSP
6	1/2" NPT
7	PC 1/2" NPT
D	DIN Connector 18 (43650)
M	M12 Connector
X	OTHER - SPECIFY

ACCESSORIES

A	Clamp
B	Sanitary Nipple - 1”BSP
F	O’ring seal for clamp
S	Sanitary Nipple - TC Connections
MT	Medium Temp - 50mm 316SS Neck (up to 120°C)
0	NONE

Rev: 07/20

Sitron - Brasil
R. Baronesa de Itu, 83
São Paulo - SP - 01231-001
T.: (5511) 3825-2111
F.: (5511) 3825-2171

Sitron - USA
1800 Prime Place
Hauppauge, NY 11788
PH: 516-935-8001

www.sitron.com
BRASIL: vendas@sitron.com
USA / Other Countries: info@sitron.com